Fuchs-
Steel pipes for the water industry

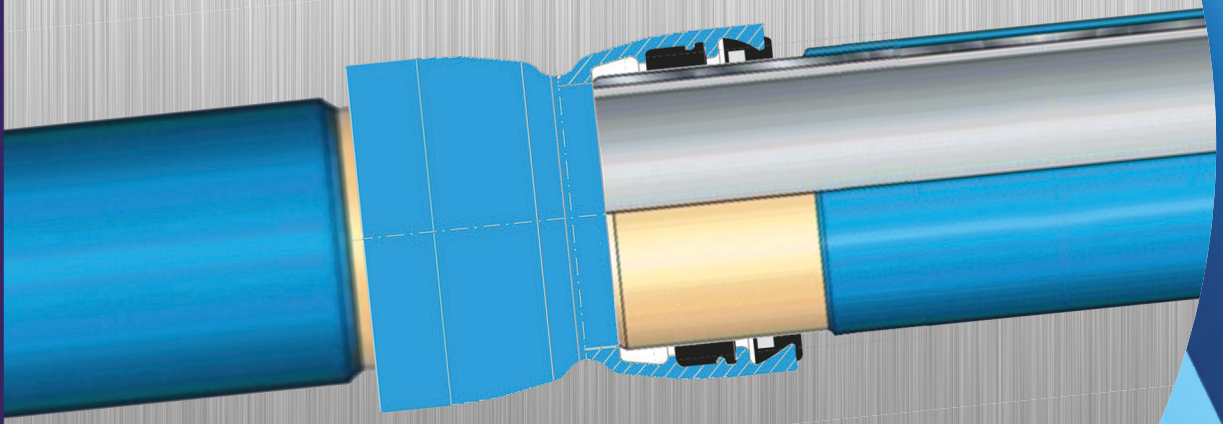

with double socket

www.alpe-tirol.com

ALPE
EFFICIENT PIPE SYSTEMS

water & waste water management energy economy industrial sector

Mannesmann / ALPE „system Fuchspipe“

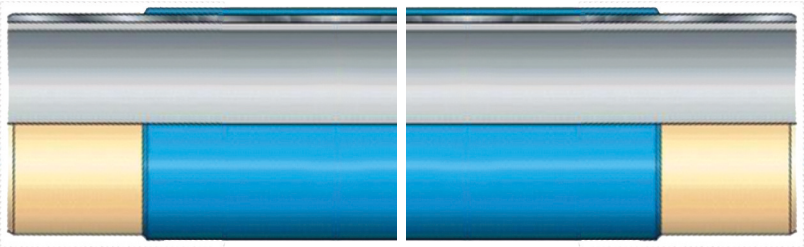

DN	outside diameter mm	wall thick-ness mm	min. cement thickness mm	weight per meter kg/m	coating thickness HDPE mm	connecting system allowable operation pressure		
						TYTON® PFA	TYTON-SIT® PFA tensile resistant	DKM® PFA tensile resistant
80	88,9	3,2	3	11,4	1,8	25*	16**	--
100	117,5	3,2/3,6	3	15,4	1,8	40	16	40
125	139,7	3,2/3,6	3	19,7	2,0	40	--	40
150	168,3	3,6/4,0	3	24,0	2,0	40	16	25/40
200	219,1	4,0/4,5	4	35,6	2,0	40	10	25/40
250	273,0	5,0/5,6	4	48,0	2,0	40	10	25/40
300	323,9	5,6/6,3	4	62,3	2,2	40	10	25/40

* Lip-seal ** Lip-seal with stainless steel teeth

ZSK-steellinepipes to DIN2460 in relation to DIN EN 10224, standard lengths 6 m and 12 m, cement mortar lining compliant with DIN EN 10298/DIN 2880 (Portland cement), PE-coating (HDPE) in accordance with DIN 30670, both ends flat for double socket connection, suitable for highly aggressive envirnoments, pipe ends fitted with caps, acceptance test certificate 3.1 to DIN EN 10204, by request with mounted double socket.

Socket Fittings made from cast iron GGG according EN545, Epoxy-Coating according GSK (Gütegemeinschaft Schwerer Korrosions-schutz), blue-coloured, PFA40.

ADVANTAGES:

- full protection against ground corrosion and resistant to electric current up to 25000 volts
- diversity of coating options (polyethylene coating, fibre cement ....)
- available in pipe lengths from 0,40 m to 16 m
- socket can be bend up to 5°/double socket to 10°
- different connecting systems possibilities (TYTON®, TYTON-SIT® tensile resistant, DKM® tensile resistant)
- with or without mounted double chamber socket
- scrap-free working
- limited weight
- simple laying, without complex resources
- compatibility with fittings and other pipe systems
- cost effectiveness, excellent cost-performance ratio

PIPE-LAYING TECHNIQUE

The universal pipe-laying tool is used to make up and break out socket joints. It is suitable for use with Tyton®, Tyton-Sit® and DKM® connections. To break out an axially force-locking joint, the „clamping segments“ must first be loosened (see „Axially force-locking joints“). The pipe-laying tool is normaly used for plastic-coated socket pipes, and has to be modified for FCM-coated pipes.

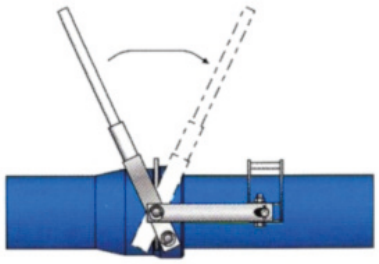

QUALITY & RELIABILITY

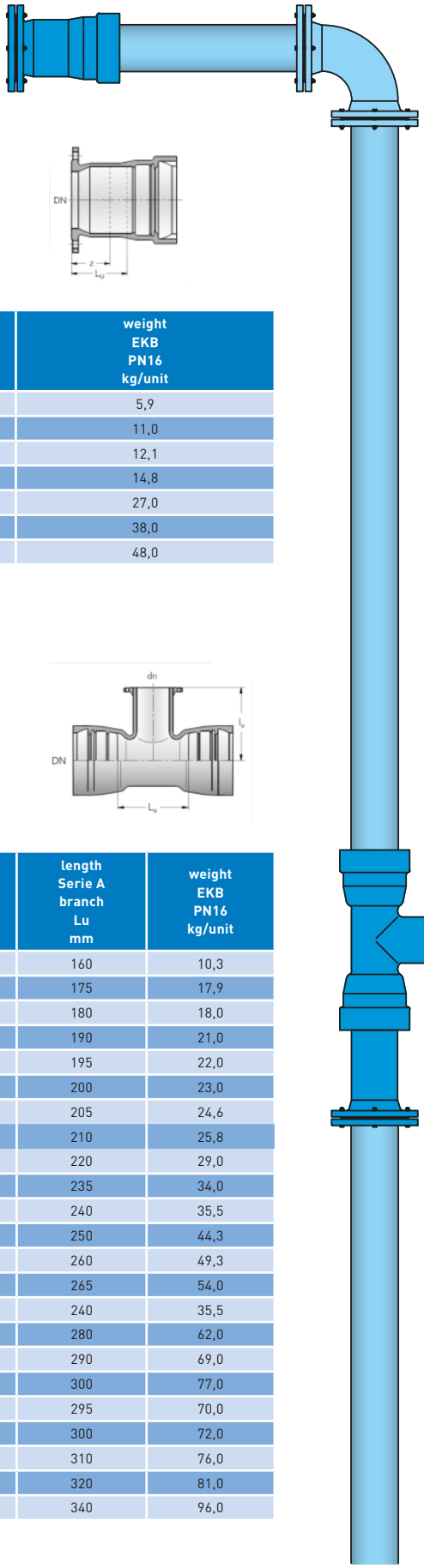

EU
Flanged socket

DN	length Serie A Lu mm	weight EKB PN16 kg/unit
80	68	5,9
100	110	11,0
125	115	12,1
150	120	14,8
200	120	27,0
250	125	38,0
300	130	48,0

MMA
Double socket tee with flanged branch

x dn	length Serie A body Lu mm	length Serie A branch Lu mm	weight EKB PN16 kg/unit
80x80	105	160	10,3
100x80	170	175	17,9
100x100	190	180	18,0
125x80	170	190	21,0
125x100	195	195	22,0
125x125	225	200	23,0
150x80	170	205	24,6
150x100	195	210	25,8
150x150	255	220	29,0
200x80	200	235	34,0
200x100	200	240	35,5
200x150	255	250	44,3
200x200	315	260	49,3
250x80	200	265	54,0
250x100	200	240	35,5
250x150	260	280	62,0
250x200	315	290	69,0
250x250	375	300	77,0
300x80	205	295	70,0
300x100	205	300	72,0
300x150	260	310	76,0
300x200	320	320	81,0
300x300	435	340	96,0

MMB
double socket tee with socket branch

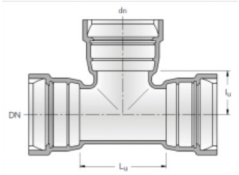

DN x dn	length Serie A body Lu mm	length Serie A branch Lu mm	weight EKB PN16 kg/unit
80x80	105	56	7,8
100x80	170	95	16,0
100x100	190	95	18,0
125x80	170	74	21,0
125x100	195	74	22,0
125x125	225	120	23,0
150x80	195	120	25,2
150x100	195	120	31,2
150x150	255	125	33,1
200x80	200	145	39,8
200x100	200	145	40,9
200x150	255	150	43,9
200x200	315	155	47,2
250x80	200	170	46,9
250x100	200	175	47,3
250x150	260	180	53,1
250x200	315	185	58,3
250x250	375	190	67,9
300x80	205	195	57,1
300x100	205	200	59,9
300x150	320	200	64,9
300x200	320	205	68,9
300x300	430	215	95,0

F
Flanged spigot

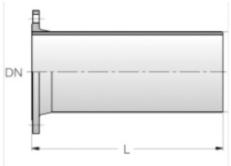

DN	length Serie A L mm	weight EKB PN10/16 kg/unit
80	167	5,3
100	360	9,7
125	370	12,5
150	380	15,8
200	400	22,8
250	420	32,3
300	440	43,2

KNOW-HOW & COMPETENCE

MMK/MMQ
Double flanged bend

DN	length Serie A Lu mm	Angle	weight EKB kg/unit
80	75	90°	5,1
80	50	45°	4,9
80	30	22,5°	4,4
80	25	11,25°	4,1
100	120	90°	12,8
100	65	45°	11,2
100	50	30°	10,8
100	40	22,5°	10,0
100	30	11,25°	9,9
125	145	90°	18,0
125	75	45°	17,5
125	60	30°	16,0
125	50	22,5°	16,0
125	35	11,25°	15,0
150	170	90°	21,6
150	85	45°	18,5
150	65	30°	18,0
150	55	22,5°	17,4
150	35	11,25°	15,3
200	220	90°	32,0
200	110	45°	30,2
200	80	30°	27,5
200	65	22,5°	26,5
200	40	11,25°	24,7
250	270	90°	60,0
250	130	45°	52,0
250	105	30°	48,0
250	75	22,5°	46,0
250	50	11,25°	44,0
300	320	90°	85,0
300	150	45°	72,0
300	115	30°	67,0
300	85	22,5°	65,0
300	55	11,25°	58,0

MMR
Double socket taper

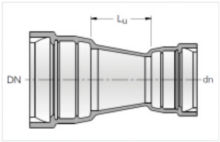

DN x dn	length Serie A Lu mm	weight TYTON EKB kg/unit
100x80	90	9,2
125x80	140	11,3
125x100	100	11,8
150x80	190	15,5
150x100	150	16,2
150x125	100	16,5
200x100	250	20,5
200x125	200	22,7
200x150	150	22,5
250x125	300	31,9
250x150	250	34,9
250x200	150	35,8
300x150	350	51,5
300x200	250	44,9
300x250	150	45,3

EN
Hydrant duckfoot bend

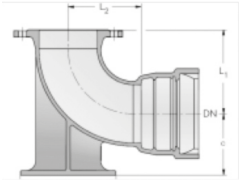

DN	L1 mm	L2 mm	d mm	weight EKB PN10/16 kg/unit
80x80	165	80	110	9,9
100x80	180	158	125	19,0
100x100	220	265	160	36,5

N
Flanged duckfoot bend

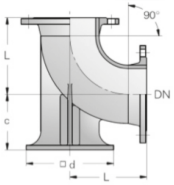

DN	L mm	c mm	d mm	e mm	weight EKB PN10/16 kg/unit
80	165	110	18	7,0	15,9
100	180	125	200	7,2	16,9
125	200	140	225	7,5	24,3
150	220	160	250	7,8	36,8
200	260	190	300	8,4	62,0
250	350	225	350	9,0	105,0
300	400	255	400	9,6	159,0

MM
Double socket

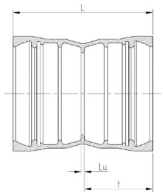

DN	length Lu mm	L mm	t mm	weight DKM EKB kg/unit
100	6	252	123	8,0
125	6	258	126	10,5
150	6	264	129	13,0
200	7	283	138	18,0
250	7	293	143	25,0
300	9	309	150	38,0

Fittings made from cast iron GGG

according DIN EN 545, flanges produced and bored according to DIN 1092-2 (PN10/16),
Epoxy-Coating according GSK (Gütegemeinscheinschaft Schwerer Korrosionsschutz), blue-coloured,
For diameters more than 14" or higher pressures please ask.

Description	DN1	Allegory	L in mm	DN 50	DN 65	DN 80	DN 100	DN 125	DN 150	DN 200	DN 250	DN 300
	DN2											
T-Stücke	50			•	•	•	•	•	•			
T-Stücke	65				•	•	•	•	•			
T-Stücke	80					•	•	•	•	•	•	•
T-Stücke	100						•	•	•	•	•	•
T-Stücke	125							•	•	•	•	•
T-Stücke	150								•	•	•	•
T-Stücke	200									•	•	•
T-Stücke	250										•	•
T-Stücke	300											
FFR-Stücke	50				•	•	•		•			
FFR-Stücke	65						•					
FFR-Stücke	80						•	•	•	•	•	
FFR-Stücke	100							•	•	•	•	•
FFR-Stücke	125									•	•	
FFR-Stücke	150									•	•	•
FFR-Stücke	200										•	•
FFR-Stücke	250											•
Q-Stücke				•	•	•	•	•	•	•	•	•
N-Stücke				•	•	•	•	•	•	•	•	•
FFK-Stücke 45°				•	•	•	•	•	•	•	•	•
FFK-Stücke 30°				•	•	•	•	•	•	•	•	•
FFK-Stücke 22°				•	•	•	•	•	•	•	•	•
FFK-Stücke 11°				•	•	•	•	•	•	•	•	•
FF-Stücke			100	•	•	•	•	•	•	•	•	•
FF-Stücke			150			•	•	•	•	•	•	•
FF-Stücke			200	•	•	•	•	•	•	•	•	•
FF-Stücke			250	•	•	•	•	•	•	•	•	•
FF-Stücke			300	•	•	•	•	•	•	•	•	•
FF-Stücke			350	•	•	•	•	•	•	•	•	•
FF-Stücke			400			•	•	•	•	•	•	•
FF-Stücke			500	•	•	•	•	•	•	•	•	•
FF-Stücke			600	•	•	•	•	•	•	•	•	•
FF-Stücke			700			•	•	•	•	•	•	•
FF-Stücke			800			•	•	•	•	•	•	•
FF-Stücke			900			•	•	•	•	•	•	•
FF-Stücke			1000		•	•	•	•	•	•	•	•
FF-Stücke			1100			•	•	•	•	•	•	•
FF-Stücke			1200			•	•	•	•	•	•	•
FF-Stücke			1300			•	•	•	•	•	•	•
FF-Stücke			1400			•	•	•	•	•	•	•
FF-Stücke			1500			•	•	•	•	•	•	•
FF-Stücke			1600			•	•	•	•	•	•	•
FF-Stücke			1700			•	•	•	•	•	•	•
FF-Stücke			1800			•	•	•	•	•	•	•
FF-Stücke			1900			•	•	•	•	•	•	•
FF-Stücke			2000			•	•	•	•	•	•	•
TT-Stücke	80					•						
TT-Stücke	100						•					
TT-Stücke	125							•				
TT-Stücke	150								•			
TT-Stücke	200									•		
TT-Stücke	250										•	
TT-Stücke	300											•

ALPE
EFFICIENT PIPE SYSTEMS

Auweg 3 A-6422 Stams
Tel. 05263/51 110 Fax. 05263/51 110-25
office@alpe-tirol.com www.alpe-tirol.com

www.alpe-tirol.com